Chapter 4

Oscillatory Systems

©2005 by Harvey Gould, Jan Tobochnik, and Wolfgang Christian
22 February 2005

We explore the behavior of oscillatory systems, including the simple harmonic oscillator, a simple pendulum, electrical circuits, and introduce the concept of phase space.

4.1 Simple Harmonic Motion

There are many physical systems that undergo regular, repeating motion. Motion that repeats itself at definite intervals, for example, the motion of the earth about the sun, is said to be *periodic*. If an object undergoes periodic motion between two limits over the same path, we call the motion *oscillatory*. Examples of oscillatory motion that are familiar to us from our everyday experience include a plucked guitar string and the pendulum in a grandfather clock. Less obvious examples are microscopic phenomena such as the oscillations of the atoms in crystalline solids.

To illustrate the important concepts associated with oscillatory phenomena, consider a block of mass m connected to the free end of a spring. The block slides on a frictionless, horizontal surface (see Figure 4.1). We specify the position of the block by x and take $x = 0$ to be the equilibrium position of the block, that is, the position when the spring is relaxed. If the block is moved from $x = 0$ and then released, the block oscillates along a horizontal line. If the spring is not compressed or stretched too far from $x = 0$, the force on the block at position x is proportional to x:

$$F = -kx. \tag{4.1}$$

The force constant k is a measure of the stiffness of the spring. The negative sign in (4.1) implies that the force acts to restore the block to its equilibrium position. Newton's equation of motion for the block can be written as

$$\frac{d^2x}{dt^2} = -{\omega_0}^2 x, \tag{4.2}$$

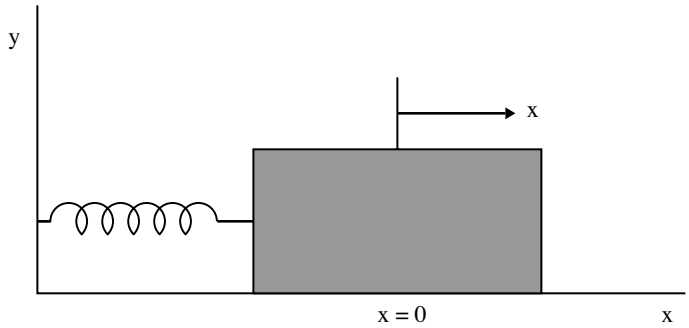

Figure 4.1: A one-dimensional harmonic oscillator. The block slides horizontally on the frictionless surface.

where the angular frequency ω_0 is defined by

$$\omega_0{}^2 = \frac{k}{m}. \tag{4.3}$$

The dynamical behavior described by (4.2) is called *simple harmonic motion* and can be solved analytically in terms of sine and cosine functions. Because the form of the solution will help us introduce some of the terminology needed to discuss oscillatory motion, we include the solution here. One form of the solution is

$$x(t) = A\cos(\omega_0 t + \delta), \tag{4.4}$$

where A and δ are constants and the argument of the cosine is in radians. It is straightforward to check by substitution that (4.4) is a solution of (4.2). The constants A and δ are called the amplitude and the phase respectively, and are determined by the initial conditions for x and the velocity $v = dx/dt$.

Because the cosine is a periodic function with period 2π, we know that $x(t)$ in (4.4) also is periodic. We define the period T as the smallest time for which the motion repeats itself, that is,

$$x(t+T) = x(t). \tag{4.5}$$

Because $\omega_0 T$ corresponds to one cycle, we have

$$T = \frac{2\pi}{\omega_0} = \frac{2\pi}{\sqrt{k/m}}. \tag{4.6}$$

The frequency ν of the motion is the number of cycles per second and is given by $\nu = 1/T$. Note that T depends on the ratio k/m and not on A and δ. Hence the period of simple harmonic motion is independent of the amplitude of the motion.

Although the position and velocity of the oscillator are continuously changing, the total energy E remains constant and is given by

$$E = \frac{1}{2}mv^2 + \frac{1}{2}kx^2 = \frac{1}{2}kA^2. \tag{4.7}$$

The two terms in (4.7) are the kinetic and potential energies, respectively.

Problem 4.1. Energy conservation

a. Use an `ODESolver` to solve the dynamical equations for a simple harmonic oscillator by extending `AbstractSimulation` and implementing the `doStep` method (see Sections 2.6 and 4.2). Have your program plot $\Delta E_n = E_n - E_0$, where E_n is the total energy per unit mass at time $t_n = t_0 + n\Delta t$. (E_0 is the initial energy.) Plot the difference ΔE_n as a function of t_n for several cycles for a given value of Δt. Choose $x(t=0) = 1$, $v(t=0) = 0$ and ${\omega_0}^2 = k/m = 9$ and start with $\Delta t = 0.05$. Is the difference ΔE_n uniformly small throughout the cycle? Does ΔE_n drift, that is, become bigger with time? What is the optimum choice of Δt?

b. Use the Euler-Cromer algorithm to answer the same questions as in part (a).

c. Modify the program so that the Euler-Richardson or Verlet algorithms are used and answer the same questions as in part (a).

d. Describe the qualitative differences between the time dependence of ΔE_n using the various algorithms. Which algorithm is most consistent with the requirement of conservation of energy? For fixed Δt, which algorithm yields better results for the position in comparison to the analytical solution (4.4)? Is the requirement of conservation of energy consistent with the relative accuracy of the computed positions?

e. Choose the best algorithm based on the your criteria, and determine the values of Δt that are needed to conserve the total energy to within 0.1% over one cycle for $\omega_0 = 3$ and for $\omega_0 = 12$. Can you use the same value of Δt for both values of ω_0? If not, how do the values of Δt correspond to the relative values of the period in the two cases?

Problem 4.2. Analysis of simple harmonic motion

1. Use your results from Problem 4.1 to select an appropriate numerical algorithm and an optimum value of Δt for the simple harmonic oscillator and modify your program so that the time dependence of the potential and kinetic energies is plotted. Where in the cycle is the kinetic energy (potential energy) a maximum?

2. Compute the average value of the kinetic energy and the potential energy during a complete cycle. What is the relation between the two averages?

3. Compute $x(t)$ for different values of A and show that the shape of $x(t)$ is independent of A, that is, show that $x(t)/A$ is a *universal* function of t for a fixed value of k/m. In what units should the time be measured so that the ratio $x(t)/A$ is independent of k/m?

4. The dynamical behavior of the one-dimensional oscillator is completely specified by $x(t)$ and $p(t)$, where p is the momentum of the oscillator. These quantities may be interpreted as the coordinates of a point in a two-dimensional space known as *phase space*. As time increases, the point $(x(t), p(t))$ moves along a trajectory in phase space. Modify your program so that the momentum p is plotted as a function of x, that is, choose p and x as the vertical and horizontal axes respectively. Choose $\omega_0 = 3$ and compute the phase space trajectory for the initial condition $x(t=0) = 1, v(t=0) = 0$. What is the shape of this trajectory? What is

the shape for the initial conditions, $x(t=0)=0, v(t=0)=1$ and $x(t=0)=4, v(t=0)=0$? Do you find a different phase trajectory for each initial condition? What physical quantity distinguishes the phase trajectories? Is the motion of a representative point (x,p) always in the clockwise or counterclockwise direction?

Problem 4.3. Lissajous figures

A computer display can be used to simulate the output seen on an oscilloscope. Imagine that the vertical and horizontal inputs to an oscilloscope are sinusoidal in time, that is, $x = A_x \sin(\omega_x t + \phi_x)$ and $y = A_y \sin(\omega_y t + \phi_y)$. If the curve that is drawn repeats itself, such a curve is called a *Lissajous figure*. Write a program to plot y versus x, as t advances from $t=0$. First choose $A_x = A_y = 1$, $\omega_x = 2$, $\omega_y = 3$, $\phi_x = \pi/6$, and $\phi_y = \pi/4$. For what values of the angular frequencies ω_x and ω_y do you obtain a Lissajous figure? How do the phase factors ϕ_x and ϕ_y and the amplitudes A_x and A_y affect the curves?

Waves are ubiquitous in nature and give rise to important phenomena such as beats and standing waves. We investigate their behavior in Problem 4.4. We will study the behavior of waves more systematically in Chapter 9.

Problem 4.4. Superposition of waves

a. Write a program to plot $A\sin(kx+\omega t)$ from $x = x_{\min}$ to $x = x_{\max}$ for various values of t as t advances from $t=0$ to $2\pi/\omega$. For simplicity, take $A=1$, $\omega = 2\pi$, and $k = 2\pi/\lambda$, and $\lambda = 2$.

b. Modify your program so that it plots the sum of $y_1 = \sin(kx-\omega t)$ and $y_2 = \sin(kx+\omega t)$. The quantity $y_1 + y_2$ corresponds to the superposition of two waves. Choose $\lambda = 2$ and $\omega = 2\pi$. What kind of a wave do you obtain?

c. Use your program to demonstrate beats by plotting $y_1 + y_2$ as a function of time in the range $x_{\min} = -10$ and $x_{\max} = 10$. Determine the beat frequency for each of the following superpositions: $y_1(x,t) = \sin[8.4(x-1.1t)]$, $y_2(x,t) = \sin[8.0(x-1.1t)]$; $y_1(x,t) = \sin[8.4(x-1.2t)]$, $y_2(x,t) = \sin[8.0(x-1.0t)]$; and $y_1(x,t) = \sin[8.4(x-1.0t)]$, $y_2(x,t) = \sin[8.0(x-1.2t)]$. What difference do you observe between these superpositions?

4.2 The Motion of a Pendulum

A common example of a mechanical system that exhibits oscillatory motion is the simple pendulum (see Figure 4.2). A simple pendulum is an idealized system consisting of a particle or bob of mass m attached to the lower end of a rigid rod of length L and negligible mass; the upper end of the rod pivots without friction. If the bob is pulled to one side from its equilibrium position and released, the pendulum swings in a vertical plane.

Because the bob is constrained to move along the arc of a circle of radius L about the center O, the bob's position is specified by its arc length or by the angle θ (see Figure 4.2). The linear velocity and acceleration of the bob as measured along the arc are given by

$$v = L\frac{d\theta}{dt} \tag{4.8}$$

$$a = L\frac{d^2\theta}{dt^2}. \tag{4.9}$$

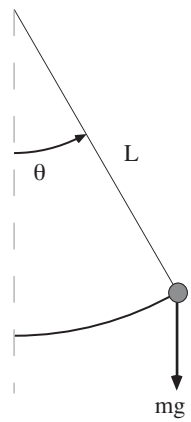

Figure 4.2: Force diagram for a simple pendulum. The angle θ is measured from the vertical direction and is positive if the mass is to the right of the vertical and negative if it is to the left.

In the absence of friction, two forces act on the bob: the force mg vertically downward and the force of the rod which is directed inward to the center if $|\theta| < \pi/2$. Note that the effect of the rigid rod is to constrain the motion of the bob along the arc. From Figure 4.2, we can see that the component of mg along the arc is $mg \sin\theta$ in the direction of decreasing θ. Hence, the equation of motion can be written as

$$mL\frac{d^2\theta}{dt^2} = -mg\sin\theta, \tag{4.10}$$

or

$$\frac{d^2\theta}{dt^2} = -\frac{g}{L}\sin\theta. \tag{4.11}$$

Equation (4.11) is an example of a nonlinear equation because $\sin\theta$ rather than θ appears. Most nonlinear equations do not have analytical solutions in terms of well-known functions, and (4.11) is no exception. However, if the amplitude of the pendulum oscillations is sufficiently small, then $\sin\theta \approx \theta$, and (4.11) reduces to

$$\frac{d^2\theta}{dt^2} \approx -\frac{g}{L}\theta. \qquad (\theta \ll 1) \tag{4.12}$$

Remember that θ is measured in radians.

Part of the fun of studying physics comes from realizing that equations that appear in different areas (and different fields) often are identical. An example of this crossover effect can be seen from a comparison of (4.2) and (4.12). If we associate x with θ, we see that the two equations are identical in form, and we can immediately conclude that for $\theta \ll 1$, the period of a pendulum is given by

$$T = 2\pi\sqrt{L/g}. \qquad \text{(small amplitude oscillations)} \tag{4.13}$$

One way to understand the motion of a pendulum with large oscillations is to solve (4.11) numerically. Because we know that a numerical solution must be consistent with conservation of energy, we derive the form of the total energy here. The potential energy can be found from the following considerations. If the rod is deflected by the angle θ, then the bob is raised by the distance $h = L - L\cos\theta$ (see Figure 4.2). Hence, the potential energy of the bob in the gravitational field of the earth is

$$U = mgh = mgL(1 - \cos\theta), \tag{4.14}$$

where the zero of the potential energy corresponds to $\theta = 0$. Because the kinetic energy of the pendulum is $\frac{1}{2}mv^2 = \frac{1}{2}mL^2(d\theta/dt)^2$, the total energy E of the pendulum is

$$E = \frac{1}{2}mL^2\Big(\frac{d\theta}{dt}\Big)^2 + mgL(1 - \cos\theta). \tag{4.15}$$

In the following, we adopt the notation $\omega = d\theta/dt$ for the angular velocity.

We use two classes to simulate and visualize the motion of a pendulum problem, `Pendulum` and `PendulumApp`. The `Pendulum` class implements the `Drawable` and `ODE` interfaces and solves its dynamical equations using the Euler-Richardson algorithm. The parameter ω_0 is written as `w`, to avoid confusion with the angular frequency w.

Listing 4.1: A `Drawable` class that models the simple pendulum.

```
package org.opensourcephysics.sip.ch04;
import java.awt.*;
import org.opensourcephysics.display.*;
import org.opensourcephysics.numerics.*;

public class Pendulum implements Drawable, ODE {
   double w2 = 3;                          // w^2 = g/L (not to be confused with angular frequency)
   double[] state = new double[]{0, 0, 0}; // {theta, omega, t}
   Color color = Color.red;
   int pixRadius = 6;
   EulerRichardson odeSolver = new EulerRichardson(this);
   public void setStepSize(double dt) {
      odeSolver.setStepSize(dt);
   }

   public void step() {
      odeSolver.step (); // execute one Euler-Richardson step
   }

   public void setState(double theta, double omega) {
      state[0] = theta;
      state[1] = omega; // angular frequency
   }

   public double[] getState() {
      return state;
   }
```

```
    public void getRate(double[] state, double[] rate) {
        rate[0] = state[1];                  // rate of change of angle
        rate[1] = -w2*Math.sin(state[0]); // rate of change of angular velocity
        rate[2] = 1;                         // time
    }

    public void draw(DrawingPanel drawingPanel, Graphics g) {
        int xpivot = drawingPanel.xToPix(0);
        int ypivot = drawingPanel.yToPix(0);
        int xpix = drawingPanel.xToPix(Math.sin(state[0]));
        int ypix = drawingPanel.yToPix(-Math.cos(state[0]));
        g.setColor(Color.black);
        g.drawLine(xpivot, ypivot, xpix, ypix);                    // the string
        g.setColor(color);
        g.fillOval(xpix-pixRadius, ypix-pixRadius, 2*pixRadius, 2*pixRadius); // bob
    }
}
```

Note that `Pendulum` implements the `draw` method as required by the `Drawable` interface.

The target class, `PendulumApp`, is shown in Listing 4.2. Both the angle as a function of time and an animation are drawn.

Listing 4.2: Visualization of the motion of a pendulum.

```
package org.opensourcephysics.sip.ch04;
import org.opensourcephysics.controls.*;
import org.opensourcephysics.frames.*;

public class PendulumApp extends AbstractSimulation {
    PlotFrame plotFrame = new PlotFrame("Time", "Theta", "Theta versus Time");
    Pendulum pendulum = new Pendulum();
    DisplayFrame displayFrame = new DisplayFrame("Pendulum");
    public PendulumApp() {
        displayFrame.addDrawable(pendulum);
        displayFrame.setPreferredMinMax(-1.2, 1.2, -1.2, 1.2);
    }

    public void initialize() {
        double dt = control.getDouble("dt");
        double theta = control.getDouble("initial theta");
        double omega = control.getDouble("initial omega");
        pendulum.setState(theta, omega);
        pendulum.setStepSize(dt);
    }

    public void doStep() {
        plotFrame.append(0, pendulum.state[2], pendulum.state[0]); // angle vs time data added
        pendulum.step();                                           // advance the state by one time step
    }
```

```
    public void reset() {
        pendulum.state[2] = 0; // set time = 0
        control.setValue(" initial theta", Math.PI/2);
        control.setValue(" initial omega", 3);
        control.setValue("dt", 0.1);
    }

    public static void main(String[] args) { // creates a simulation control structure using this class
        SimulationControl.createApp(new PendulumApp());
    }
}
```

Problem 4.5. Oscillations of a pendulum

a. Make the necessary changes so that the analytical solution for small angles also is plotted.

b. Test the program at sufficiently small amplitudes so that $\sin\theta \approx \theta$. Choose $\omega_0 = 3$ and the initial condition $\theta(t = 0) = 0.1$, $\omega(t = 0) = 0$ and determine the period. Estimate the error due to the small angle approximation for these initial conditions.

c. Simulate large amplitude oscillations of a pendulum. Set $\omega_0 = 3$ and choose Δt so the numerical algorithm generates a stable solution. Check the stability of the solution by monitoring the total energy and ensuring that it does not drift from its initial value.

d. Set $\omega(t = 0) = 0$ and make plots of $\theta(t)$ and $\omega(t)$ for the initial conditions $\theta(t = 0) = 0.1$, 0.2, 0.4, 0.8, and 1.0. Remember that θ is measured in radians. Describe the qualitative behavior of θ and ω. What is the period T and the amplitude $\theta_{\max}$ in each case? Plot T versus $\theta_{\max}$ and discuss the qualitative dependence of the period on the amplitude. How do your results for T compare in the linear and nonlinear cases, for example, which period is larger? Explain the relative values of T in terms of the relative magnitudes of the restoring force in the two cases.

4.3 Damped Harmonic Oscillator

We know from experience that most oscillatory motion in nature gradually decreases until the displacement becomes zero; such motion is said to be *damped* and the system is said to be *dissipative* rather than conservative. As an example of a damped harmonic oscillator, consider the motion of the block in Figure 4.1 when a horizontal drag force is included. For small velocities, it is a reasonable approximation to assume that the drag force is proportional to the first power of the velocity. In this case the equation of motion can be written as

$$\frac{d^2x}{dt^2} = -{\omega_0}^2 x - \gamma \frac{dx}{dt}. \tag{4.16}$$

The *damping coefficient* γ is a measure of the magnitude of the drag term. Note that the drag force in (4.16) opposes the motion. We simulate the behavior of the damped linear oscillator in Problem 4.6.

Problem 4.6. Damped linear oscillator

a. Incorporate the effects of damping into your harmonic oscillator simulation and plot the time dependence of the position and the velocity. Describe the qualitative behavior of $x(t)$ and $v(t)$ for $\omega_0 = 3$ and $\gamma = 0.5$ with $x(t = 0) = 1$, $v(t = 0) = 0$.

b. The period of the motion is the time between successive maxima of $x(t)$. Compute the period and corresponding angular frequency and compare their values to the undamped case. Is the period longer or shorter? Make additional runs for $\gamma = 1$, 2, and 3. Does the period increase or decrease with greater damping? Why?

c. The amplitude is the maximum value of x during one cycle. Compute the *relaxation time* τ, the time it takes for the amplitude of an oscillation to decrease by $1/e \approx 0.37$ from its maximum value. Is the value of τ constant throughout the motion? Compute τ for the values of γ considered in part (b) and discuss the qualitative dependence of τ on γ.

d. Plot the total energy as a function of time for the values of γ considered in part (b). If the decrease in energy is not monotonic, explain.

e. Compute the time dependence of $x(t)$ and $v(t)$ for $\gamma = 4$, 5, 6, 7, and 8. Is the motion oscillatory for all γ? How can you characterize the decay? For fixed ω_0, the oscillator is said to be *critically damped* at the smallest value of γ for which the decay to equilibrium is monotonic. For what value of γ does critical damping occur for $\omega_0 = 4$ and $\omega_0 = 2$? For each value of ω_0, compute the value of γ for which the system approaches equilibrium most quickly.

f. Compute the phase space diagram for $\omega_0 = 3$ and $\gamma = 0.5$, 2, 4, 6, and 8. Why does the phase space trajectory converge to the origin, $x = 0$, $v = 0$? This point is called an *attractor*. Are these qualitative features of the phase space plot independent of γ?

Problem 4.7. Damped nonlinear pendulum

Consider a damped pendulum with $\omega_0 = 3$ and $\gamma = 1$ and the initial condition $\theta(t = 0) = 0.2, \omega(t = 0) = 0$. In what ways is the motion of the damped nonlinear pendulum similar to the damped linear oscillator? In what ways is it different? What is the shape of the phase space trajectory for the initial condition $\theta(t = 0) = 1, \omega(t = 0) = 0$? Do you find a different phase trajectory for other initial conditions? Remember that θ is restricted to be between $-\pi$ and $+\pi$.

4.4 Response to External Forces

How can we determine the period of a pendulum that is not already in motion? The obvious way is to disturb the system, for example, to displace the bob and observe its motion. We will find that the nature of the response of the system to a small perturbation tells us something about the nature of the system in the absence of the perturbation.

Consider the driven damped linear oscillator with an external force $F(t)$ in addition to the linear restoring force and linear damping force. The equation of motion can be written as

$$\frac{d^2x}{dt^2} = -{\omega_0}^2 x - \gamma v + \frac{1}{m}F(t). \tag{4.17}$$

It is customary to interpret the response of the system in terms of the displacement x rather than the velocity v.

The time dependence of $F(t)$ in (4.17) is arbitrary. Because many forces in nature are periodic, we first consider the form

$$\frac{1}{m}F(t) = A_0 \cos \omega t, \tag{4.18}$$

where ω is the angular frequency of the driving force. In Problem 4.8 we consider the response of the damped linear oscillator to (4.18).

Problem 4.8. Motion of a driven damped linear oscillator

a. Modify your simple harmonic oscillator program so that an external force of the form (4.18) is included. Add this force to the class that encapsulates the equations of motion without changing the target class. The angular frequency of the driving force should be added as an input parameter.

b. Choose $\omega_0 = 3$, $\gamma = 0.5$, $\omega = 2$ and the amplitude of the external force $A_0 = 1$ for all runs unless otherwise stated. For these values of ω_0 and γ, the dynamical behavior in the absence of an external force corresponds to a underdamped oscillator. Plot $x(t)$ versus t in the presence of the external force with the initial condition, $x(t = 0) = 1, v(t = 0) = 0$. How does the qualitative behavior of $x(t)$ differ from the nonperturbed case? What is the period and angular frequency of $x(t)$ after several oscillations? Repeat the same observations for $x(t)$ with $x(t = 0) = 0, v(t = 0) = 1$. Does $x(t)$ approach a limiting behavior that is independent of the initial conditions? Does the short time behavior of $x(t)$ depend on the initial conditions? Identify a transient part of $x(t)$ that depends on the initial conditions and decays in time, and a steady state part that dominates at longer times and is independent of the initial conditions.

c. Compute $x(t)$ for several combinations of ω_0 and ω. What is the period and angular frequency of the steady state motion in each case? What parameters determine the frequency of the steady state behavior?

d. A measure of the long-term behavior of the driven harmonic oscillator is the amplitude of the steady state displacement $A(\omega)$. The amplitude function $A(\omega)$ can be be computed for a given value of ω if we run the simulation until steady state has been achieved. We then test the position after every time step to see if a new maximum has been reached. One way to determine $A(\omega)$ is given by the following code:

```
if (x > Math.abs(max)) {
 amplitude = Math.abs(x);
 control.println("new amplitude = " + amplitude);
}
```

e. Measure the amplitude and phase shift to verify that the steady state behavior of $x(t)$ is given by

$$x(t) = A(\omega) \cos(\omega t + \delta). \tag{4.19}$$

The quantity δ is the phase difference between the applied force and the steady state motion. Compute $A(\omega)$ and $\delta(\omega)$ for $\omega_0 = 3$, $\gamma = 0.5$, and $\omega = 0$, 1.0, 2.0, 2.2, 2.4, 2.6, 2.8, 3.0, 3.2, and 3.4. Choose the initial condition, $x(t = 0) = 0, v(t = 0) = 0$. Repeat the simulation for $\gamma = 3.0$, and plot $A(\omega)$ and $\delta(\omega)$ versus ω for the two values of γ. Discuss the qualitative behavior of $A(\omega)$ and $\delta(\omega)$ for the two values of γ. If $A(\omega)$ has a maximum, determine the angular frequency $\omega_{\max}$ at which the maximum of A occurs. Is the value of $\omega_{\max}$ close to the natural angular frequency ω_0? Compare $\omega_{\max}$ to ω_0 and to the frequency of the damped linear oscillator in the absence of an external force.

f. Compute $x(t)$ and $A(\omega)$ for a damped linear oscillator with the amplitude of the external force $A_0 = 4$. How do the steady state results for $x(t)$ and $A(\omega)$ compare to the case $A_0 = 1$? Does the transient behavior of $x(t)$ satisfy the same relation as the steady state behavior?

g. What is the shape of the phase space trajectory for the initial condition $x(t = 0) = 1, v(t = 0) = 0$? Do you find a different phase trajectory for other initial conditions?

h. Why is $A(\omega = 0) < A(\omega)$ for small ω? Why does $A(\omega) \to 0$ for $\omega \gg \omega_0$?

i. Does the mean kinetic energy resonate at the same frequency as does the amplitude? Compute the mean kinetic energy over one cycle once steady state conditions have been reached. Choose $\omega_0 = 3$ and $\gamma = 0.5$.

In Problem 4.8 we found that the response of the damped harmonic oscillator to an external driving force is linear. For example, if the magnitude of the external force is doubled, then the magnitude of the steady state motion also is doubled. This behavior is a consequence of the linear nature of the equation of motion. When a particle is subject to nonlinear forces, the response can be much more complicated (see Section 6.8).

For many problems, the sinusoidal driving force in (4.18) is not realistic. Another example of an external force can be found by observing someone pushing a child on a swing. Because the force is nonzero only for short intervals of time, this type of force is impulsive. In the following problem, we consider the response of a damped linear oscillator to an impulsive force.

*__Problem 4.9.__ Response of a damped linear oscillator to nonsinusoidal external forces

a. Assume a swing can be modeled by a linear restoring force and a linear damping term. The effect of an impulse is to change the velocity. For simplicity, let the duration of the push equal the time step Δt. Introduce an integer variable for the number of time steps and use the `modulus` (%) operator to ensure that the impulse is nonzero only at the time interval associated with the period of the external impulse. Determine the steady state amplitude $A(\omega)$ for $\omega = 1.0$, 1.3, 1.4, 1.5, 1.6, 2.5, 3.0, and 3.5. The corresponding period of the impulse is given by $T = 2\pi/\omega$. Choose $\omega_0 = 3$ and $\gamma = 0.5$. Are your results consistent with your experience of pushing a swing and with the comparable results of Problem 4.8?

b. Consider the response to a half-wave external force consisting of the positive part of a cosine function (see Figure 4.3). Compute $A(\omega)$ for $\omega_0 = 3$ and $\gamma = 0.5$. At what values of ω does $A(\omega)$ have a relative maxima? Is the half-wave cosine driving force equivalent to a sum of cosine functions of different frequencies? For example, does $A(\omega)$ have more than one resonance?

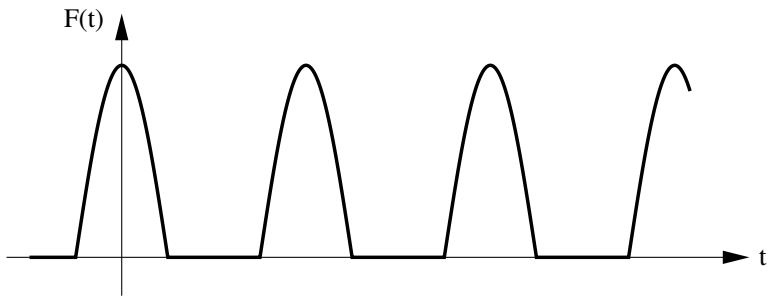

Figure 4.3: A half-wave driving force corresponding to the positive part of a cosine function.

c. Compute the steady state response $x(t)$ to the external force

$$\frac{1}{m}F(t) = \frac{1}{\pi} + \frac{1}{2}\cos t + \frac{2}{3\pi}\cos 2t - \frac{2}{15\pi}\cos 4t. \tag{4.20}$$

How does a plot of $F(t)$ versus t compare to the half-wave cosine function? Use your results to conjecture a principle of superposition for the solutions to linear equations.

In many of the problems in this chapter we have asked you to draw a phase space plot for a single oscillator. This plot provides a convenient representation of both the position and velocity. When we study chaotic phenomena such plots will become almost indispensable (see Chapter 6). Here we will consider an important feature of phase space trajectories for conservative systems.

If there are no external forces, the undamped simple harmonic oscillator and undamped pendulum are examples of conservative systems, that is, systems for which the total energy is a constant. In Problems 4.10 and 4.11 we will study two general properties of conservative systems, the non-intersecting nature of their trajectories in phase space and the preservation of area in phase space. These concepts will become more important when we study the properties of conservative systems with more than one degree of freedom.

Problem 4.10. Trajectory of a simple harmonic oscillator in phase space

a. We explore the phase space behavior of a single harmonic oscillator by simulating N initial conditions simultaneously. Write a program to simulate N identical simple harmonic oscillators each of which is represented by a small circle centered at its position and velocity in phase space as shown in Fig. 4.4. One way to do so is to adapt the `BouncingBallApp` class introduced in Section 2.6 because this class shows N balls in position space. Choose $N = 16$ and consider random initial positions and velocities. Do the phase space trajectories for different initial conditions ever cross? Explain your answer in terms of the uniqueness of trajectories in a deterministic system.

b. Choose a set of initial conditions that form a rectangle (see Figure 4.4). Does the shape of this area change with time? What happens to the total area in comparison to the original area?

Problem 4.11. Trajectory of a pendulum in phase space

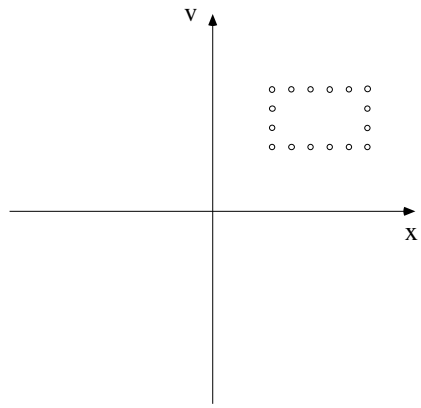

Figure 4.4: What happens to a given area in phase space for conservative systems?

a. Modify your program from Problem 4.10 so that the phase space trajectories (ω versus θ) of $N = 16$ pendula with different initial conditions can be compared. Plot several phase space trajectories for different values of the total energy. Are the phase space trajectories closed? Does the shape of the trajectory depend on the total energy?

b. Choose a set of initial conditions that form a rectangle in phase space, and plot the state of each harmonic oscillator as a circle. Does the shape of this area change with time? What happens to the total area?

4.5 Electrical Circuit Oscillations

In this section we discuss several electrical analogues of the mechanical systems that we have considered. Although the equations of motion are similar in form, it is convenient to consider electrical circuits separately, because the nature of the questions of interest is somewhat different.

The starting point for electrical circuit theory is Kirchhoff's loop rule, which states that the sum of the voltage drops around a closed path of an electrical circuit is zero. This law is a consequence of conservation of energy, because a voltage drop represents the amount of energy that is lost or gained when a unit charge passes through a circuit element. The relations for the voltage drops across each circuit element are summarized in Table 4.1.

Imagine an electrical circuit with an alternating voltage source $V_s(t)$ attached in series to a resistor, inductor, and capacitor (see Figure 4.5). The corresponding loop equation is

$$V_{\rm L} + V_{\rm R} + V_{\rm C} = V_s(t). \tag{4.21}$$

The voltage source term V_s in (4.21) is the *emf* and is measured in units of volts. If we substitute the relationships shown in Table 4.1, we find

$$L\frac{d^2Q}{dt^2} + R\frac{dQ}{dt} + \frac{Q}{C} = V_s(t), \tag{4.22}$$

element	voltage drop	symbol	units
resistor	$V_{\rm R} = IR$	resistance R	ohms (Ω)
capacitor	$V_{\rm C} = Q/C$	capacitance C	farads (F)
inductor	$V_{\rm L} = L\,dI/dt$	inductance L	henries (H)

Table 4.1: The voltage drops across the basic electrical circuit elements. Q is the charge (coulombs) on one plate of the capacitor, and I is the current (amperes).

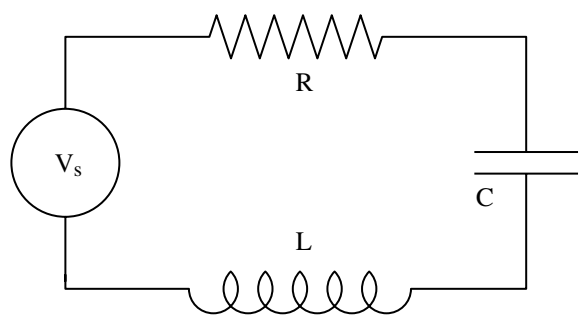

Figure 4.5: A simple series RLC circuit with a voltage source V_s.

where we have used the definition of current $I = dQ/dt$. We see that (4.22) for the series RLC circuit is identical in form to the damped harmonic oscillator (4.17). The analogies between ideal electrical circuits and mechanical systems are summarized in Table 4.2.

Although we are already familiar with (4.22), we first consider the dynamical behavior of an RC circuit described by

$$RI(t) = R\frac{dQ}{dt} = V_s(t) - \frac{Q}{C}. \tag{4.23}$$

Two RC circuits corresponding to (4.23) are shown in Figure 4.6. Although the loop equation (4.23) is identical regardless of the order of placement of the capacitor and resistor in Figure 4.6, the output voltage measured by the oscilloscope in Figure 4.6 is different. We will see in Problem 4.12 that these circuits act as filters that pass voltage components of certain frequencies while rejecting others.

An advantage of a computer simulation of an electrical circuit is that the measurement of a voltage drop across a circuit element does not affect the properties of the circuit. In fact, digital computers often are used to optimize the design of circuits for special applications. The `RCApp` program is not shown here because it is similar to `PendulumApp`, but this program is available in the Chapter 4 package. The `RCApp` program simulates an RC circuit with an alternating current (AC) voltage source of the form $V_s(t) = \cos\omega t$ and plots the time dependence of the charge on the capacitor. You are asked to modify this program in Problem 4.12.

Problem 4.12. Simple filter circuits

Electric circuit	Mechanical system
charge Q	displacement x
current $I = dQ/dt$	velocity $v = dx/dt$
voltage drop	force
inductance L	mass m
inverse capacitance $1/C$	spring constant k
resistance R	damping γ

Table 4.2: Analogies between electrical parameters and mechanical parameters.

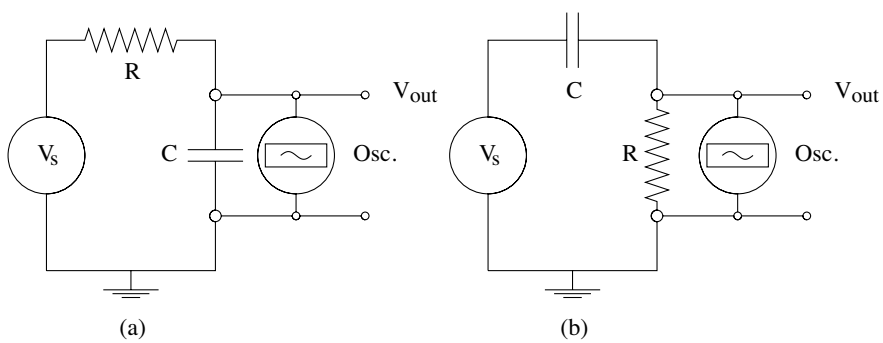

Figure 4.6: Examples of RC circuits used as low and high pass filters. Which circuit is which?

a. Modify the `RCApp` program to simulate the voltages in an RC filter. Your program should plot the voltage across the resistor, $V_{\rm R}$, and the voltage across the source, V_s, in addition to the voltage across the capacitor, $V_{\rm C}$. Run this program with $R = 1000\,\Omega$ and $C = 1.0\,\mu$F (10^{-6} farads). Find the steady state amplitude of the voltage drops across the resistor and across the capacitor as a function of the angular frequency ω of the source voltage $V_s = \cos\omega t$. Consider the frequencies $f = 10$, 50, 100, 160, 200, 500, 1000, 5000, and 10000 Hz. (Remember that $\omega = 2\pi f$.) Choose Δt to be no more than 0.0001 s for $f = 10$ Hz. What is a reasonable value of Δt for $f = 10000$ Hz?

b. The output voltage depends on where the digital oscilloscope is connected. What is the output voltage of the oscilloscope in Figure 4.6a? Plot the ratio of the amplitude of the output voltage to the amplitude of the input voltage as a function of ω. Use a logarithmic scale for ω. What range of frequencies is passed? Does this circuit act as a high pass or a low pass filter? Answer the same questions for the oscilloscope in Figure 4.6b. Use your results to explain the operation of a high and low pass filter. Compute the value of the cutoff frequency for which the amplitude of the output voltage drops to $1/\sqrt{2}$ (half-power) of the input value. How is the cutoff frequency related to RC?

c. Plot the voltage drops across the capacitor and resistor as a function of time. The phase difference ϕ between each voltage drop and the source voltage can be found by finding the time t_m between the corresponding maxima of the voltages. Because ϕ is usually expressed in radians, we have the relation $\phi/2\pi = t_m/T$, where T is the period of the oscillation. What is

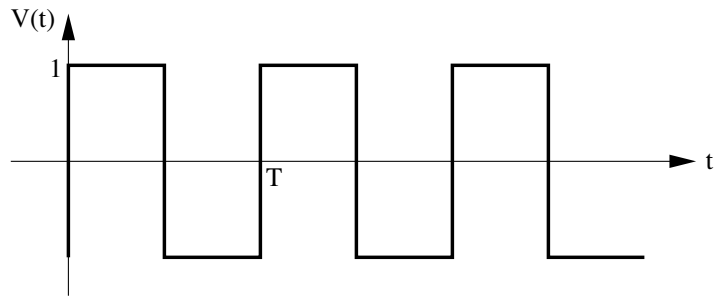

Figure 4.7: Square wave voltage with period T and unit amplitude.

the phase difference ϕ_C between the capacitor and the voltage source and the phase difference ϕ_R between the resistor and the voltage source? Do these phase differences depend on ω? Does the current lead or lag the voltage, that is, does the maxima of $V_{\rm R}(t)$ come before or after the maxima of $V_s(t)$? What is the phase difference between the capacitor and the resistor? Does the latter difference depend on ω?

d. Modify your program to find the steady state response of an LR circuit with a source voltage $V_s(t) = \cos\omega t$. Let $R = 100\,\Omega$ and $L = 2\times 10^{-3}\,$H. Because $L/R = 2\times 10^{-5}\,$s, it is convenient to measure the time and frequency in units of $T_0 = L/R$. We write $t^* = t/T_0$, $\omega^* = \omega T_0$, and rewrite the equation for an LR circuit as

$$I(t^*) + \frac{dI(t^*)}{dt^*} = \frac{1}{R}\cos\omega^* t^*. \tag{4.24}$$

Because it will be clear from the context, we now simply write t and ω rather than t^* and ω^*. What is a reasonable value of the step size Δt? Compute the steady state amplitude of the voltage drops across the inductor and the resistor for the input frequencies $f = 10$, 20, 30, 35, 50, 100, and 200 Hz. Use these results to explain how an LR circuit can be used as a low pass or a high pass filter. Plot the voltage drops across the inductor and resistor as a function of time and determine the phase differences ϕ_R and ϕ_L between the resistor and the voltage source and the inductor and the voltage source. Do these phase differences depend on ω? Does the current lead or lag the voltage? What is the phase difference between the inductor and the resistor? Does the latter difference depend on ω?

Problem 4.13. Square wave response of an RC circuit

Modify your program so that the voltage source is a periodic square wave as shown in Figure 4.7. Use a $1.0\,\mu$F capacitor and a $3000\,\Omega$ resistor. Plot the computed voltage drop across the capacitor as a function of time. Make sure the period of the square wave is long enough so that the capacitor is fully charged during one half-cycle. What is the approximate time dependence of $V_{\rm C}(t)$ while the capacitor is charging (discharging)?

We now consider the steady state behavior of the series RLC circuit shown in Figure 4.5 and represented by (4.22). The response of an electrical circuit is the current rather than the charge on

the capacitor. Because we have simulated the analogous mechanical system, we already know much about the behavior of driven RLC circuits. Nonetheless, we will find several interesting features of AC electrical circuits in the following two problems.

Problem 4.14. Response of an RLC circuit

a. Consider an RLC series circuit with $R = 100\,\Omega$, $C = 3.0\,\mu$F, and $L = 2\,$mH. Modify the simple harmonic oscillator program or the RC filter program to simulate an RLC circuit and compute the voltage drops across the three circuit elements. Assume an AC voltage source of the form $V(t) = V_0 \cos \omega t$. Plot the current I as a function of time and determine the maximum steady state current $I_{\rm max}$ for different values of ω. Obtain the *resonance curve* by plotting $I_{\rm max}(\omega)$ as a function of ω and compute the value of ω at which the resonance curve is a maximum. This value of ω is the *resonant frequency*.

b. The sharpness of the resonance curve of an AC circuit is related to the quality factor or Q value. (Q should not be confused with the charge on the capacitor.) The sharper the resonance, the larger the value of Q. Circuits with high Q (and hence a sharp resonance) are useful for tuning circuits in a radio so that only one station is heard at a time. We define $Q = \omega_0/\Delta\omega$, where the width $\Delta\omega$ is the frequency interval between points on the resonance curve $I_{\rm max}(\omega)$ that are $\sqrt{2}/2$ of $I_{\rm max}$ at its maximum. Compute Q for the values of R, L, and C given in part (a). Change the value of R by 10% and compute the corresponding percentage change in Q. What is the corresponding change in Q if L or C is changed by 10%?

c. Compute the time dependence of the voltage drops across each circuit element for approximately fifteen frequencies ranging from 1/10 to 10 times the resonant frequency. Plot the time dependence of the voltage drops.

d. The ratio of the amplitude of the sinusoidal source voltage to the amplitude of the current is called the *impedance* Z of the circuit, that is, $Z = V_{\rm max}/I_{\rm max}$. This definition of Z is a generalization of the resistance that is defined by the relation $V = IR$ for direct current circuits. Use the plots of part (d) to determine $I_{\rm max}$ and $V_{\rm max}$ for different frequencies and verify that the impedance is given by

$$Z(\omega) = \sqrt{R^2 + (\omega L - 1/\omega C)^2}. \tag{4.25}$$

For what value of ω is Z a minimum? Note that the relation $V = IZ$ holds only for the maximum values of I and V and not for I and V at any time.

e. Compute the phase difference ϕ_R between the voltage drop across the resistor and the voltage source. Consider $\omega \ll \omega_0$, $\omega = \omega_0$, and $\omega \gg \omega_0$. Does the current lead or lag the voltage in each case, that is, does the current reach a maxima before or after the voltage? Also compute the phase differences ϕ_L and ϕ_C and describe their dependence on ω. Do the relative phase differences between $V_{\rm C}$, $V_{\rm R}$, and $V_{\rm L}$ depend on ω?

f. Compute the amplitude of the voltage drops across the inductor and the capacitor at the resonant frequency. How do these voltage drops compare to the voltage drop across the resistor and to the source voltage? Also compare the relative phases of $V_{\rm C}$ and $V_{\rm L}$ at resonance. Explain how an RLC circuit can be used to amplify the input voltage.

4.6 Accuracy and Stability

Now that we have learned how to use numerical methods to find numerical solutions to simple first-order differential equations, we need to develop some practical guidelines to help us estimate the accuracy of the various methods. Because we have replaced a differential equation by a difference equation, our numerical solution usually is not identically equal to the true solution of the original differential equation. The discrepancy between the two solutions has two causes. One cause is that computers do not store numbers with infinite precision, but rather to a maximum number of digits that is hardware and software dependent. As we have seen, Java allows the programmer to distinguish between *floating point* numbers, that is, numbers with decimal points, and *integer* numbers. Arithmetic with numbers represented by integers is exact. However, we cannot solve a differential equation using integer arithmetic. Arithmetic operations such as addition and division, which involve floating point numbers, introduce *roundoff error*. For example, if a computer only stored floating point numbers to two significant figures, the product 2.1×3.2 would be stored as 6.7 rather than 6.72. The significance of roundoff errors is that they accumulate as the number of mathematical operations increases. Ideally, we should choose algorithms that do not significantly magnify the roundoff error, for example, we should avoid subtracting numbers that are nearly the same in magnitude.

The other source of the discrepancy between the true answer and the computed answer is the error associated with the choice of algorithm. This error is called the *truncation error*. A truncation error would exist even on an idealized computer that stored floating point numbers with infinite precision and hence had no roundoff error. Because the truncation error depends on the choice of algorithm and hence can be controlled by the programmer, you should be motivated to learn more about numerical analysis and the estimation of truncation errors. However, there is no general prescription for the best algorithm for obtaining numerical solutions of differential equations. We will find in later chapters that each algorithm has advantages and disadvantages, and the appropriate selection depends on the nature of the solution, which you might not know in advance, and on your objectives. How accurate must the answer be? Over how large an interval do you need the solution? What kind of computer are you using? How much computer time and personal time do you have?

In practice, we usually can determine the accuracy of a numerical solution by reducing the value of Δt until the numerical solution is unchanged at the desired level of accuracy. Of course, we have to be careful not to make Δt too small, because too many steps would be required and the computation time and roundoff error would increase.

In addition to accuracy, another important consideration is the *stability* of an algorithm. As discussed in Appendix 3A, it might happen that the numerical results are very good for short times, but diverge from the true solution for longer times. This divergence might occur if small errors in the algorithm are multiplied many times, causing the error to grow geometrically. Such an algorithm is said to be *unstable* for the particular problem. We consider the accuracy and the stability of the Euler algorithm in Problems 4.15 and 4.16.

Problem 4.15. Accuracy of the Euler algorithm

a. Use the modified version of the Euler program that you wrote for Problem 3.1 to compute the numerical solution of $dy/dx = 2x$ with $y = 1$ at $x = 0$ with $\Delta x = 0.1$, 0.05, 0.025, 0.01, and

0.005. Your program should already have a table showing the difference between the exact solution and the numerical solution. Is the difference between these solutions a decreasing function of Δx? That is, if Δx is decreased by a factor of two, how does the difference change? Plot the difference as a function of Δx. If your points fall approximately on a straight line, then the difference is proportional to Δx (for $\Delta x \ll 1$). The numerical method is called nth order if the difference between the analytical solution and the numerical solution is proportional to $(\Delta x)^n$ at a fixed value of x. What is the order of the Euler algorithm?

b. One way to determine the accuracy of a numerical solution is to repeat the calculation with a smaller step size and compare the results. If the two calculations agree to p decimal places, we can reasonably assume that the results are correct to p decimal places. What value of Δx is necessary for 0.1% accuracy at $x = 2$? What value of Δx is necessary for 0.1% accuracy at $x = 4$?

Problem 4.16. Stability of the Euler algorithm

a. Consider the differential equation in (4.23) with $Q = 0$ at $t = 0$. This equation represents the charging of a capacitor in an RC circuit with a constant applied voltage V. Choose $R = 2000\,\Omega$, $C = 10^{-6}$ farads, and $V = 10$ volts. What are the units of time? Do you expect $Q(t)$ to increase with t? Does $Q(t)$ increase indefinitely or does it reach a steady-state value? Use a program to solve (4.23) numerically using the Euler algorithm. What value of Δt is necessary to obtain three decimal accuracy at $t = 0.005$?

b. What is the nature of your numerical solution to (4.23) at $t = 0.05$ for $\Delta t = 0.005$, 0.0025, and 0.001? Does a small change in Δt lead to a large change in the computed value of Q? Is the Euler algorithm stable in this calculation for reasonable values of Δt?

4.7 Projects

Project 4.17. Chemical oscillations

The kinetics of chemical reactions can be modeled by a system of coupled first-order differential equations. As an example, consider the following reaction

$$A + 2B \rightarrow 3B + C, \tag{4.26}$$

where A, B, and C represent the concentrations of three different types of molecules. The corresponding rate equations for this reaction are

$$\frac{dA}{dt} = -kAB^2 \tag{4.27a}$$

$$\frac{dB}{dt} = kAB^2 \tag{4.27b}$$

$$\frac{dC}{dt} = kAB^2. \tag{4.27c}$$

The rate at which the reaction proceeds is determined by the reaction constant k. The terms on the right-hand side of (4.27) are positive if the concentration of the molecule increases in (4.26) as it

does for B and C, and negative if the concentration decreases as it does for A. Note that the term $2B$ in the reaction (4.26) appears as B^2 in the rate equation (4.27). In (4.27) we have assumed that the reactants are well stirred, so that there are no spatial inhomogeneities. In Section 7.8 we will discuss the effects of spatial inhomogeneities due to molecular diffusion.

Most chemical reactions proceed to equilibrium, where the mean concentrations of all molecules are constant. However, if the concentrations of some molecules are replenished, it is possible to observe other kinds of behavior, such as oscillations and chaotic behavior. To obtain oscillations, it is essential to have a series of chemical reactions such that the products of some reactions are the reactants of others. In the following, we consider a simple set of reactions that can lead to oscillations under certain conditions (see Lefever and Nicolis):

$$A \to X \tag{4.28a}$$
$$B + X \to Y + D \tag{4.28b}$$
$$2X + Y \to 3X \tag{4.28c}$$
$$X \to C. \tag{4.28d}$$

If we assume that the reverse reactions are negligible and A and B are held constant by an external source, the corresponding rate equations are

$$\frac{dX}{dt} = A - (B+1)X + X^2Y \tag{4.29a}$$
$$\frac{dY}{dt} = BX - X^2Y. \tag{4.29b}$$

For simplicity, we have chosen the rate constants to be unity.

1. The steady state solution of (4.29) can be found by setting dX/dt and dY/dt equal to zero. Show that the steady state values for (X, Y) are $(A, B/A)$.

2. Write a program to solve numerically the rate equations given by (4.29). Your program should input the initial values of X and Y and the fixed concentrations A and B, and plot X versus Y as the reactions evolve.

3. Systematically vary the initial values of X and Y for given values of A and B. Are their steady state behaviors independent of the initial conditions?

4. Let the initial value of (X, Y) equal $(A + 0.001, B/A)$ for several different values of A and B, that is, choose initial values close to the steady state values. Classify which initial values result in steady state behavior (stable) and which ones show periodic behavior (unstable). Find the relation between A and B that separates the two types of behavior.

References and Suggestions for Further Reading

F. S. Acton, *Numerical Methods That Work*, The Mathematical Association of America (1990), Chapter 5.

G. L. Baker and J. P. Gollub, *Chaotic Dynamics: An Introduction*, second edition, Cambridge University Press (1996). A good introduction to the notion of phase space.

A. Douglas Davis, *Classical Mechanics*, Academic Press (1986). The author gives a "crash" course in conversational Basic and Pascal and simple numerical solutions of Newton's equations of motion. Much emphasis is given to the harmonic oscillator problem.

S. Eubank, W. Miner, T. Tajima, and J. Wiley, "Interactive computer simulation and analysis of Newtonian dynamics," Am. J. Phys. **57**, 457 (1989).

Richard P. Feynman, Robert B. Leighton, and Matthew Sands, *The Feynman Lectures on Physics*, Vol. 1, Addison-Wesley (1963). Chapters 21 and 23–25 are devoted to various aspects of harmonic motion.

Charles Kittel, Walter D. Knight, and Malvin A. Ruderman, *Mechanics*, second edition, revised by A. Carl Helmholz and Burton J. Moyer, McGraw-Hill (1973).

R. Lefever and G. Nicolis, "Chemical instabilities and sustained oscillations," J. Theor. Biol. **30**, 267 (1971).

Jerry B. Marion and Stephen T. Thornton, *Classical Dynamics*, fourth edition, Academic Press (1995). Excellent discussion of linear and nonlinear oscillators.

M. F. McInerney, "Computer-aided experiments with the damped harmonic oscillator," Am. J. Phys. **53**, 991 (1985).

William H. Press, Saul A. Teukolsky, William T. Vetterling, and Brian P. Flannery, *Numerical Recipes*, second edition, Cambridge University Press (1992). Chapter 16 discusses the integration of ordinary differential equations.

Scott Hamilton, *An Analog Electronics Companion*, Cambridge University Press (2003). A good discussion of the physics and mathematics of basic circuit design including an extensive introduction to circuit simulation using the PSpice simulation program.

S. C. Zilio, "Measurement and analysis of large-angle pendulum motion," Am. J. Phys. **50**, 450 (1982).